TOP OF FOUNDATION
ELEV. 5703.91
BASED ON 1929 NGVD
FEMA MAPS

1100 SQ INCHES of
TOTAL VENT AREA
Req'd

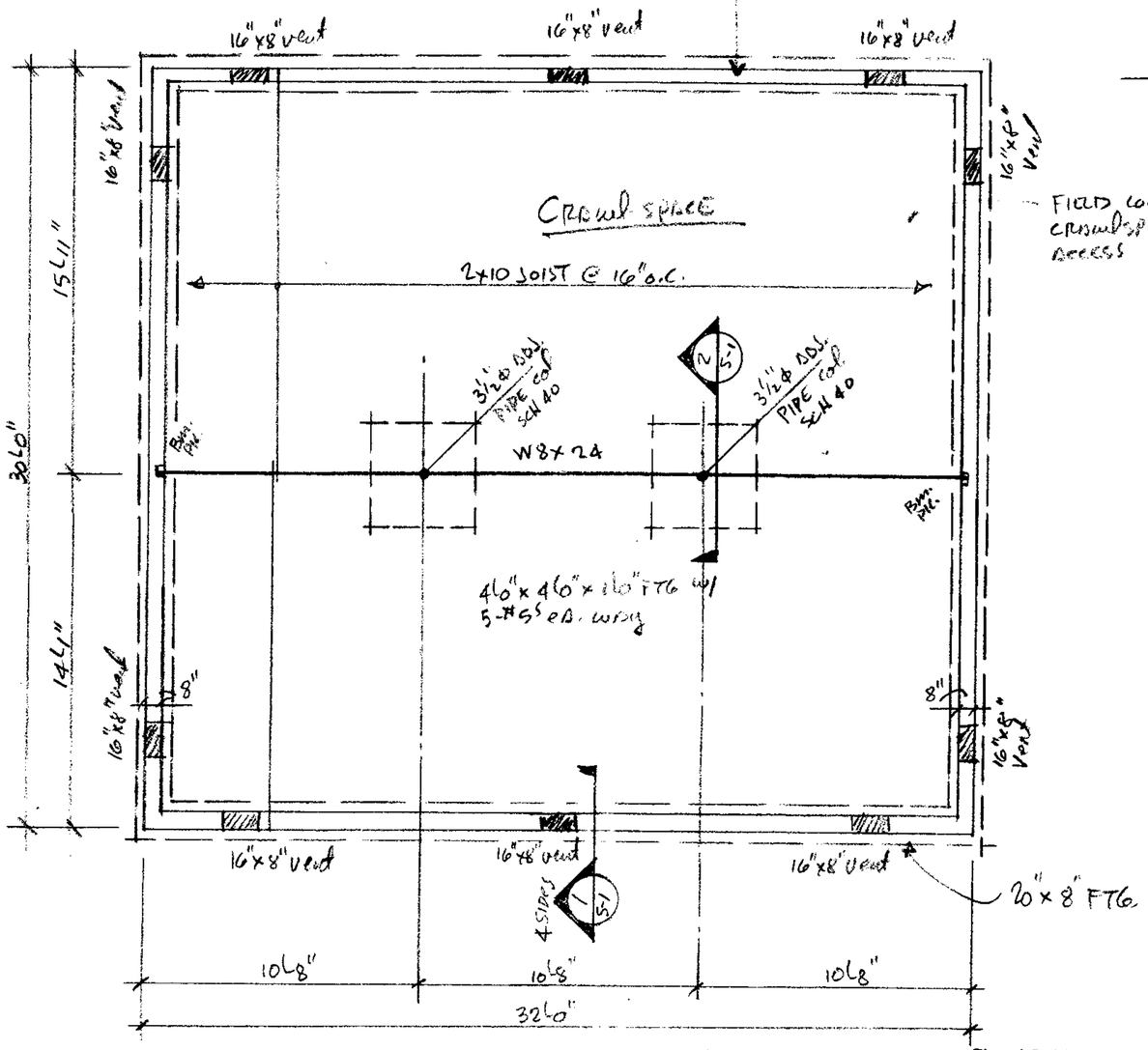

FOUNDATION PLAN
SCALE: 1/4" = 1'-0"

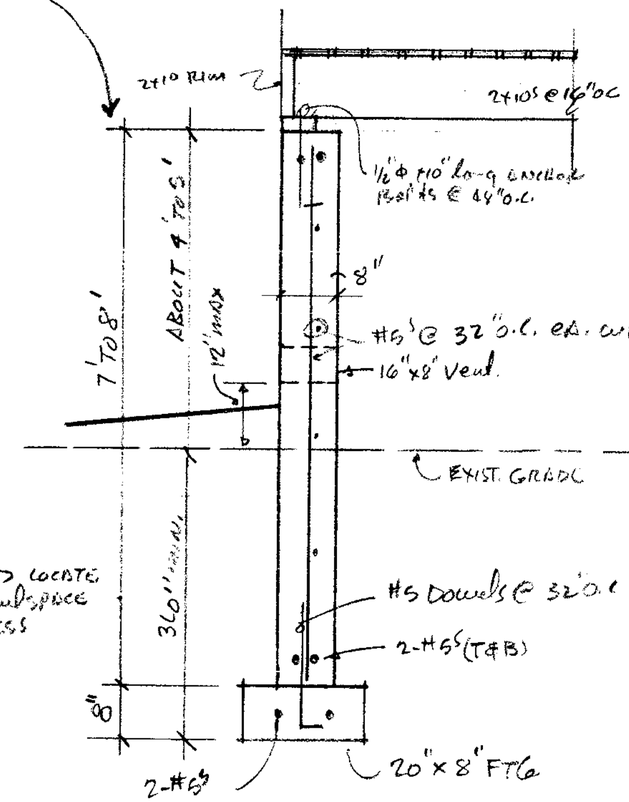

SECTION 1 / S-1
SCALE: 3/4" = 1'-0"

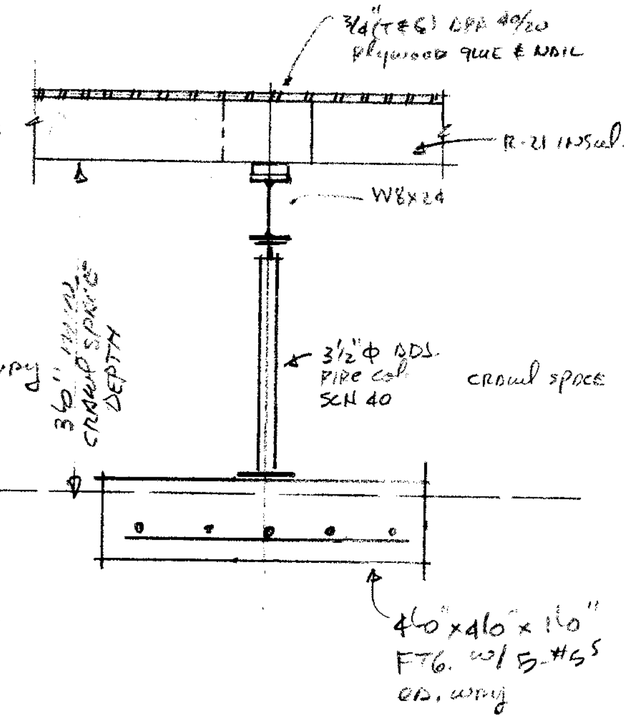

SECTION 2 / S-1
SCALE: 3/4" = 1'-0"

1100 SQ.IN. TOTAL vent AREA
16"x8" vent = 128 SQ.IN.
10 vents @ 128 SQ.IN = 1,280 SQ.IN.
1,280 SQ.IN. > 1100 SQ.IN. ok

10 VENTS @ 16" x 8"

- SOIL TEST BY: SOIL ANALYTICS #4010 5-17-06
  KEEP A COPY OF THE SOIL REPORT AT THE JOB SITE & REFER TO ITS RECOMMENDATIONS.
- FOUNDATION RECOMMENDATION:
  - SPREAD FOOTINGS:
    SOIL BRNG. PRESSURE (ALL FTGS.) = 1,200 psf
    ~~SOIL BRNG. PRESSURE (FROST WALLS) =~~
    ~~SOIL BRNG. PRESSURE (BSMT. WALLS) =~~
- CONCRETE STRENGTH = 3000 psi AT 28 DAYS.
- CONCRETE REINFORCING STEEL = GRADE 40 / ~~IN LIEU OF 2-#5 (T&B) GRADE 40 MAY BE SUBSTITUTED WITH 2-#4 (T&B) GRADE 60.~~
- PROVIDE ADDITIONAL 2-#5 BARS AROUND ALL CONC. OPENINGS.
- VERIFY ALL DIMENSIONS, DETAILS & ELEVATIONS PRIOR TO THE START OF CONSTRUCTION.
- BUILDING DESIGN LIVE LOADS:
  SNOW = 40 PSF WIND = [illegible] FLOORS = [illegible]
- FOLLOW THE UBC, ~~DBC~~ 1997 UBC, AND ALL APPLICABLE CODES.

715 C ARAPAHOE ST.
GOLDEN, JEFFERSON CO, COLORADO
LOT 1, BLOCK 18, MALTESE MANOR REPLAT

* CONDITION
- SUBMIT ELEVATION CERTIFICATE AFTER FORMING BUT PRIOR TO POURING STEMWALL
- NO CHANGE IN GRADES ALLOWED

City of Golden Permit #_____
Departmental Approval

Planning		Date
* Engineering	[illegible]	Date 7-12-06
Stormwater		Date
Env/Bkflw		Date
Fire Dept		Date
Building		Date
Other		Date

JACK WHITE P.E.
10981 ACOMA ST.
NORTHGLENN, CO.
80234
303-457-4018

6-30-06

SCALE: NOTED	APPROVED BY:	DRAWN BY JMW
DATE: 6-30-06		REVISED
FOUNDATION PLAN & DETAILS		
FOR: KEN FERRIER		DRAWING NUMBER S-1

18 X 24 PRINTED ON NO. 1000H CLEARPRINT